HP Designjet 4520 Printer series

Ideal for color production and unattended printing

Unattended color production at low cost

- Take advantage of unattended color printing with two long media rolls up to 575 ft (175 meters) and reliable 775-ml black, 400-ml color Original HP ink cartridges.
- Double your print capacity and truly maximize productivity with HP Double Swath technology and 160 GB hard disk.
- Experience greater cost efficiency with free HP support, HP supplies that deliver a better value, and finishing options that save time and money.

Provides great possibilities to grow your business

- Experience more possibilities to increase your personal productivity with the HP Instant Printing Utility 2.0, HP Embedded Web Server, and the optional Serif PosterDesigner Pro for HP[1].
- Turn your HP Designjet into a print workflow management system with optional stacker and SCP reprocontrol for HP[2].
- Produce excellent lines and images with patented HP inks, printheads enabling 0.1% line accuracy[3], and HP Professional Color technologies.
- Expand your business with high performance copy and scan capabilities[4].
- Choose from a broad portfolio of over 35 Original HP media for high-quality results from CAD drawings and renders to presentations and posters.

Trusted integration in your IT environment

- Trusted connectivity and security-with built-in Gigabit Ethernet networking, advanced access control and optional HP Jetdirect support for secure IPsec and IPv6[5]. A Linux PS driver offers additional support for Linux users[6].
- Manage your HP Designjet, fleet of devices, and your costs with HP Web Jetadmin and the embedded Web server.
- Experience true peace of mind with a printer and printing supplies you know you can trust—from a company with years of experience and expertise.

(1 Serif PosterDesigner Pro for HP is an optional feature. Not included, sold separately.

(2 SCP reprocontrol for HP is an optional feature. Not included, sold separately.

(3 +/-0.1% of the specified vector length or +/-0.1 mm (whichever greater) at 73° F (23° C), 50-60% relative humidity, on E/A0 printing material in Best or Normal mode with HP Matte Film.

(4 The HP Designjet 4520 Scanner comes standard on the HP Designjet 4520 HD-MFP. It is an optional (not included, sold separately) accessory on the HP Designjet 4520 and 4520ps printers.

(5 IPsec and IPv6 support requires the purchase of the HP Jetdirect 630n or HP Jetdirect 635n.

(6 Available on the HP Designjet 4520ps Printer and HP Designjet 4520 HD-MFP only. Support in English only.

For High Production environment	100 D/A1 prints per hour	775-ml black, 400-ml color cartridges	160 GB hard disk	Optional PostScript	SCP reprocontrol for HP	2 rolls	Scanning/ Copying capabilities

HP Designjet 4520 Printer series

1. Ink cartridge of 225 and 400-ml for CMY, and 400 and 775-ml for K.
2. Accommodates 2 media rolls with long roll support up to 575 ft (175 m)
3. Front panel with user-friendly animations.
4. Color consistency and screen-to-print matching with HP Professional Color technologies.
5. Pairs of staggered printheads in the carriage mean the HP Designjet 4520 Printer series has double the print capacity of earlier models[7].
6. HP Embedded Web Server for driverless file submission, queue management, preview, supplies and printer status, and error notification.
7. HP Embedded Jetdirect Gigabit Ethernet print server (1000Base-T) + 2 FireWire (IEEE-1394a compliant) ports.
8. EIO port for optional Jetdirect cards.
9. Embedded processor for simultaneous printing and processing. 160 GB hard disk and 608 MB standard memory—upgradeable to 1120 MB.
10. Equipped with a standard bin that holds 25 D (A1) prints. An optional stacker is capable of flattening and stacking up to 200 plots.

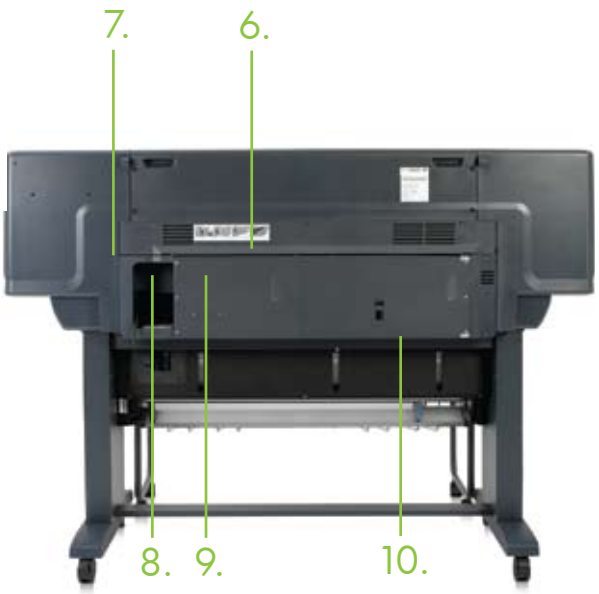

(7 Compared to any HP Designjet 600/700/800/1000 Printer

HP large black ink cartridge

HP long media roll

0.2 in (5 mm) margins

HP Double Swath Technology

HP Designjet 4520 Printer series at a glance

HP Designjet 4520 Printer
- Up to 42 in (1067 mm) wide
- 2400 x1200 dpi maximum resolution
- Two media rolls with long roll support up to 575 ft (175 m)
- Ink supplies of 225 and 400-ml for CMY, 400 and 775-ml for K
- Embedded processor and 608 MB memory upgradeable up to 1120 MB. 160 GB hard disk
- Support for HP-GL/2, HP-RTL, TIFF, JPEG, CALS G4

HP Designjet 4520ps Printer
All the features of the 4520 model, plus:
- Embedded RIP for Adobe PostScript 3, Adobe PDF 1.5

HP Designjet 4520 HD-MFP
All the features of the 4520 model, plus:
- Embedded RIP for Adobe PostScript 3, Adobe PDF 1.5
- HP Designjet 4520 Scanner

Optional accessories
- HP Designjet 4500 Stacker
- HP Designjet 4520 Scanner[4]
- HP Designjet 42 in (1067 mm) Roll Feed Spindle
- HP Designjet 512 MB Memory Upgrade
- HP Designjet High Speed USB 2.0 Card
- HP Jetdirect 630n IPv6 Gigabit Print Server
- HP Jetdirect 635n IPv6/IPsec Print Server
- Serif PosterDesigner Pro for HP
- SCP reprocontrol for HP

Optional service and support
- HP Installation Services with Network Setup (1 unit)
- HP Next Business Day Onsite Hardware Support, 3 years
- HP Same Day 9x5 Onsite Hardware Support, 3 years
- HP Same Day 13x5 Onsite Hardware Support, 3 years

Ideal for unattended printing of high-quality large-format drawings, graphics, maps, presentations, renders, and posters[1].

Full flexibility from the HP Designjet 4520 Printer series

More functionality with the HP Designjet 4520 HD-MFP

With scan speeds of 3 inches per second color and 10 inches per second black-and-white, 2 D (A1)-size prints in less than 1 minute[8], and excellent image quality (508 dpi optical resolution and up to 9600 dpi enhanced resolution), the HP Designjet 4520 HD-MFP delivers outstanding copy and scan performance.

The integrated copy system of this Designjet features real-time printer, media, and queue info in the scanner user interface, copy accounting in the printer, and copy job priority capability.

Integration with the printer enables excellent copy quality and performance.

An easy-to-use touchscreen, easy color calibration, and easy print settings for printing sets make scanning and copying exceptionally user-friendly.

It is easy to integrate with a wide variety of industry-leading third-party applications such as scan, raster-to-vector conversion, or document management.

This MFP is fully compatible. Easily print scanned documents directly to almost any HP Designjet printer[9]. Built-in scan-to-network capabilities foster productivity with fewer steps. Easily save scanned files in PDF, TIFF, JPEG2000, and DWF file formats.

HP Designjet 4500 Stacker (optional)

The HP Designjet 4500 Stacker collects up to 200 D (A1) or E (A0) size plots and automatically flattens them, keeping them organized until you can gather them. Print unattended runs during business hours—and get more done—or overnight.

Free up production staff to work on multiple projects at once. The HP Designjet 4500 Stacker handles large black-and-white or color jobs without intervention. Unattended printing allows users to get more done.

Save time and collect your valuable, high-impact output as it prints with the HP Designjet 4500 Stacker. When you're ready to gather your output, it will be organized and waiting for you. Neatly and cleanly collects all sizes and weights of printable media supported by the HP Designjet 4520 Printer series[10], including over 35 Original HP printing materials from new HP Cockle-free Coated Paper available in 100 g/m² and 170 g/m², to new chlorine-free HP Recycled Bond Paper made of 100% recycled base paper, to versatile HP Everyday Adhesive Matte Polypropylene and HP Durable Banner with DuPont™ Tyvek®.

(8 Mechanical printing time. Line drawing printed in Fast mode on HP Bright White Inkjet Paper (Bond).Speed indicated is maximum printer speed.

(9 Fully compatible with HP Designjet 510, 4020, 4520, 5000, 5500, T610, T1120, Z2100, Z3200, Z6100 series products.

(10 Stacker performance may vary depending on the media used.

HP Designjet 4520 Printer series

Technical specifications

Print speed	25 sec/page on D/A1[8], 1000 ft²/hr (93 m²/hr)[11], 100 D/A1 prints per hour[12]
Print	
Print resolution	Up to 2400 x 1200 optimized dpi
Margins (top x bottom x left x right)	0.2 x 0.2 x 0.2 x 0.2 in (5 x 5 x 5 x 5 mm)
Technology	HP Thermal Inkjet
Ink cartridge colors	Black, cyan, magenta, yellow
Ink types	Dye-based (cyan, magenta, yellow), pigment-based (black)
Ink drop	5 pl (cyan, magenta, yellow), 15 pl (black)
Line accuracy	+/- 0.1%[3]
Line Width	Minimum line width (HP-GL/2 addressable): 0.0007 in (0.02 mm) Guaranteed minimum line thickness (ISO/IEC 13660:2001(E))*: 0.0027 in (0.07 mm)
Printer media	
Thickness	Up to 15.7 mil (0.4 mm)
Weight	0.11 to 0.72 lb (50 to 328 g/m²)
Size	Rolls up to 42 in (1067 mm) wide
Scan[14]	
Scan speed	**Color (200 dpi/400 dpi Turbo):** 3 in/sec (76 mm/sec) **Black-and-white (200 dpi/400 dpi Turbo):** 10 in/sec (254 mm/sec)
Scan/copy resolution	**Enhanced mode:** 9600 x 9600 dpi, with variable resolution settings from 50 dpi in increments of 1 dpi **Best mode:** 300 x 300 dpi **Normal mode:** 200 x 200 dpi **Draft mode:** 150 x 150 dpi
Maximum scan width	42 in (1067 mm)
Maximum scan thickness	0.6 in (15 mm)
Memory	
Printer	608 MB memory (upgradeable to 1120 MB), 160 GB hard disk
Scanner[14]	1 GB memory, 40 GB hard disk
Media Handling	
Printers	Two automatic rolls, automatic roll-switching, automatic cutter
Scanner[14]	Straight-through scan paper path for sheet and cardboard originals
Media Types	
Printers	Bond and coated paper, technical paper, film, photographic paper, proofing paper, self-adhesive, banner and sign material
Scanner[14]	Non-abrasive paper, vellum, Mylar, sepia, blueprints, plastic, film, plastic laminate, foam board, cardboard. (No plywood, stone plates, metal plates or abrasive, dirty, rough, sharp edged, metal clamped, or burned surfaces or transparencies)
Stacker	Paper (plain, inkjet, coated, heavyweight coated, super heavyweight coated, semi-gloss, translucent bond, natural tracing, photo, vellum)[13]
Connectivity	
Interfaces (standard): Printers	1 Gigabit Ethernet (1000Base-T) port, 2 FireWire (IEEE-1394a compliant) ports, 1 EIO Jetdirect accessory slot
Interfaces (standard): Scanner[14]	1 Gigabit Ethernet (1000Base-T) port, 1 FireWire (IEEE-1394a compliant) port
Drivers (included)	HP-GL/2, HP-RTL, PostScript[6] drivers for Windows; HP PCL 3 GUI, PostScript[6] drivers for Mac OS X 10.4/10.5; support for Citrix XenApp and Citrix XenServer environments
Print languages (standard)	
4520	HP-GL/2, HP-RTL, TIFF, JPEG, CALS G4
4520ps & 4520 HD-MFP	Adobe PostScript 3, Adobe PDF 1.5, HP-GL/2, HP-RTL,TIFF, JPEG, CALS G4
Dimensions (h x d x w)	
Printer	76 x 31.5 x 53.2 in (1930 x 800 x 1350 mm)
Scanner[14]	70.8 x 40.2 x 54.3 in (1800 x 1020 x 1380 mm)
Stacker	50.63 x 61.77 x 44.69 in (1286 x 1569 x 1135 mm)
Shipping Printer	83.9 x 30.5 x 74.4 in (2130 x 775 x 1890 mm)
Shipping Scanner[14]	75.2 x 26.8 x 24.2 in (1910 x 680 x 615 mm)
Shipping Stacker	55.1 x 31.9 x 23.6 in (1400 x 810 x 23.6 mm)
Weight	
Printer	408 lb (185 kg)
Scanner[14]	204 lb (92.5 kg)
Stacker	116 lb (53 kg)
Shipping Printer	599.1 lb (272.3 kg)
Shipping Scanner[14]	269 lb (122 kg)
Shipping Stacker	143.3 lb (65 kg)
What's in the box	
HP Designjet 4520/4520ps	Printer, 42-in printer stand and bin, printheads (x8), printhead cleaners (x8), introductory ink cartridges, roll module, user maintenance kit, quick reference guide, setup poster, Serif PosterDesigner Pro poster, documentation and drivers CD, power cord
HP Designjet 4520 HD-MFP	All the features mentioned above, plus HP Designjet 4520 Scanner, scanner stand, touchscreen (panel PC), keyboard, quick reference guide, setup poster, documentation CD, system recovery DVD, customer service guide, FireWire cables (x2), Ethernet cable, power cord

(11 Color image (100% color coverage) printed in Fast mode on HP Bright White Inkjet Paper (Bond). Speed indicated is maximum printer speed.
(12 Multi-copy printing; total printing time. Line drawings printed in Fast mode on HP Bright White Inkjet Paper (Bond). Speed indicated is maximum printer speed.
(13 The HP Designjet 4520 Stacker does not support films, including HP Clear Film and HP Matte Film or other media with long drying times.

Environmental ranges	
Operating temperature	41 to 104° F (5 to 40° C)
Recommended operating temperature	59 to 86° F (15 to 30° C)
Storage temperature	-4 to 131° F (-20 to 55° C)
Operating humidity	20 to 80% RH
Recommended humidity	25 to 75% RH
Acoustic	
Sound pressure, active	53 dB(A)
Sound pressure, standby	38 dB(A)
Sound power, active	7.0 B(A)
Sound power, standby	5.9 B(A)
Power consumption	
Maximum	500 watts, 800 watts[14]
Power requirements	
Printers	Input voltage (auto ranging): 100 to 127 VAC (+/- 10%), 6 A; 220 to 240 VAC (+/- 10%), 3 A; 50/60 Hz (+/- 3 Hz);
Scanner	100 to 240 VAC (+/- 10%), 50/60 Hz, 5 A maximum
Certification	
Safety	USA and Canada (CSA certified), EU (LVD and EN60950-1 compliant), Russia (GOST), Singapore (PSB), China (CCC), Argentina (IRAM), Mexico (NYCE)
Environmental	EU & China RoHS, WEEE, REACH, EuP
Electromagnetic	Compliance for Class A ITE products: EU (EMC Directive), USA (FCC Rules), Canada (ICES), Australia (ACA), New Zealand (MoC), China (CCC), Japan (VCCI); Certified as Class A product: Korea (MIC), Taiwan (BSMI)
ENERGY STAR® qualified models	see: www.hp.com/go/energystar
Warranty	
	One-year limited hardware warranty
HP Care Pack Services	
UN397E	HP 3-Year Next Business Day Onsite
H4518E	HP Installation Service with Network Setup
UN394E	HP 3-Year Same Day Onsite Service (9x5)
UN390E	HP 3-Year Same Day Onsite Service (13x5)

Ordering information

Product

CM767A	HP Designjet 4520 42-in Printer
CM768A	HP Designjet 4520ps 42-in Printer
CM769A	HP Designjet 4520 HD-MFP
Accessories	
Q5676A	HP Designjet 42-in Roll Feed Spindle
Q5680A	HP Designjet High Speed USB 2.0 Card
CM973A	HP Designjet 512 MB Memory Upgrade
Q5677B	HP Designjet 4500 Stacker 110V
J7997G	HP Jetdirect 630n IPv6 Gigabit Print Server
J7961G	HP Jetdirect 635n IPv6/IPsec Print Server
CN088A	Serif PosterDesigner Pro for HP
CN454A	SCP reprocontrol for HP (1 printer)
CN455A	SCP reprocontrol for HP (2 printers)
CM770A	HP Designjet 4520 Scanner (comes as standard with HP Designjet 4520 HD-MFP)
Original HP ink cartridges	
C5054A	HP 90 Black Printhead and Cleaner
C5055A	HP 90 Cyan Printhead and Cleaner
C5056A	HP 90 Magenta Printhead and Cleaner
C5057A	HP 90 Yellow Printhead and Cleaner
C5060A	HP 90 225-ml Cyan Ink Cartridge
C5062A	HP 90 225-ml Magenta Ink Cartridge
C5064A	HP 90 225-ml Yellow Ink Cartridge
C5061A	HP 90 400-ml Cyan Ink Cartridge
C5063A	HP 90 400-ml Magenta Ink Cartridge
C5065A	HP 90 400-ml Yellow Ink Cartridge
C5058A	HP 90 400-ml Black Ink Cartridge
C5059A	HP 90 775-ml Black Ink Cartridge
C5078A	HP 90 Black Printhead/Cleaner & Ink Cartridge, 400-ml, Value Pack
C5079A	HP 90 Cyan Printhead/Cleaner & Ink Cartridge, 400-ml, Value Pack
C5080A	HP 90 Magenta Printhead/Cleaner & Ink Cartridge, 400-ml, Value Pack
C5081A	HP 90 Yellow Printhead/Cleaner & Ink Cartridge, 400-ml, Value Pack
C5082A	HP 90 Black Ink Cartridges, 400-ml, 3-ink Multipack
C5083A	HP 90 Cyan Ink Cartridges, 400-ml, 3-ink Multipack
C5084A	HP 90 Magenta Ink Cartridges, 400-ml, 3-ink Multipack
C5085A	HP 90 Yellow Ink Cartridges, 400-ml, 3-ink Multipack
C5095A	HP 90 Black Ink Cartridges, 775-ml, 3-ink Multipack
C5096A	HP 90 Black Printhead Cleaner
Original HP large-format printing materials	
Q1397A	HP Universal Bond Paper 80 g/m², 36 in. x 150 ft/914 mm x 45.7 m
Q8751A	HP Universal Bond Paper 80 g/m², 36 in. x 574 ft/914 mm x 175 m
C6810A	HP Bright White Inkjet Paper 90 g/m2, 36 in. x 300 ft/914 mm x 91.4 m
C6020B	HP Coated Paper 90 g/m², 36 in. x 150 ft/914 mm x 45.7 m
C6980A	HP Coated Paper 90 g/m², 36 in. x 300 ft/914 mm x 91.4 m
C6030C	HP Heavyweight Coated Paper 131 g/m², 36 in. x 100 ft/914 mm x 30.5 m
Q1956A	HP Heavyweight Coated Paper 131 g/m², 42 in. x 225 ft/1067 mm x 67.5 m
C3868A	HP Natural Tracing Paper 90g/m², 36 in. x 150 ft/914 mm x 45.7 m
C3875A	HP Clear Film 174 g/m², 36 in. x 75 ft/914 mm x 22.9 m
51642B	HP Matte Film 160 g/m², 36 in. x 125 ft/914 mm x 38.1 m
Q1427A	HP Universal High-gloss Photo Paper 190 g/m², 36 in. x 100 ft/914 mm x 30.5 m
Q1421A	HP Universal Semi-gloss Photo Paper 190 g/m², 36 in. x 100 ft/914 mm x 30.5 m
CG886A	HP Cockle-free Heavyweight Coated Paper 170 g/m², 24 in. x 100 ft/610 mm x 30.5 m
CG887A	HP Cockle-free Heavyweight Coated Paper 170 g/m², 36 in. x 100 ft/914 mm x 30.5 m
CG888A	HP Cockle-free Heavyweight Coated Paper 170 g/m², 42 in. x 100 ft/1067 mm x 30.5 m
CG883A	HP Cockle-free Coated Paper 100 g/m², 24 in. x 150 ft/610 mm x 45.7 m
CG884A	HP Cockle-free Coated Paper 100 g/m², 36 in. x 150 ft/914 mm x 45.7 m
CG885A	HP Cockle-free Coated Paper 100 g/m², 42 in. x 150 ft/1067 mm x 45.7 m
CG889A	HP Recycled Bond Paper 80 g/m², 24 in. x 150 ft/610 mm x 45.7 m
CG890A	HP Recycled Bond Paper 80 g/m², 36 in x 150 ft/914 mm x 45.7 m
CG891A	HP Recycled Bond Paper 80 g/m², 42 in. x 150 ft./1067 mm x 45.7 m
CG892A	HP Recycled Bond Paper 80 g/m², (A2) 16.5 in. x 150 ft./420 mm x 45.7 m
CG824A	HP Everyday Adhesive Matte Polypropylene 180 g/m², 36 in. x 75 ft/914 mm x 22.9 m
CG825A	HP Everyday Adhesive Matte Polypropylene 180 g/m², 42 in. x 75 ft/1067 mm x 22.9 m
CG843A	HP Everyday Adhesive Matte Polypropylene 180 g/m², 24 in. x 75 ft/610 mm x 22.9 m
CG821A	HP Durable Banner with DuPont™ Tyvek® 140 g/m², 36 in. x 75 ft/914 mm x 22.9 m
CG822A	HP Durable Banner with DuPont™ Tyvek® 140 g/m², 42 in. x 75 ft/1067 mm x 22.9 m
CG823A	HP Durable Banner with DuPont™ Tyvek® 140 g/m², 60 in. x 75 ft/1524 mm x 22.9 m

More HP large-format printing material sizes and weights available at:
www.hp.com/go/designjet/supplies

ecoHIGHLIGHTS

HP DESIGNJET 4520 PRINTER[1]

ECO INFORMATION

- Save paper and avoid printing mistakes with HP Instant Printing Utility 2.0
- Less ink wasted thanks to efficient installation and maintenance routine.
- Free, convenient cartridge recycling[2]
- Supports 100% recycled media

ENERGY STAR • ENERGY STAR® Qualified Product

1. Does not apply to 4520 HD-MFP
2. In countries where the HP's Planet Partner Program operates

www.hp.com/ecosolutions

Please recycle your printing hardware and supplies.
Find out how at our website.

© 2004, 2009 Hewlett-Packard Development Company, L.P. The information contained herein is subject to change without notice. The only warranties for HP products and services are set forth in the express warranty statements accompanying such products and services. Nothing herein should be construed as constituting an additional warranty. HP shall not be liable for technical or editorial errors or omissions contained herein. PANTONE is the property of Pantone, Inc. Adobe and PostScript 3 are trademarks of Adobe Systems Incorporated. FireWire is a trademark of Apple Computer, Inc., registered in the U.S. and other countries. ENERGY STAR and the ENERGY STAR mark are registered U.S. marks. Windows is a U.S. registered trademark of Microsoft Corporation.

For more information, visit our website at:
www.hp.designjet4520.com

4AA2-4845ENUC, March 2009